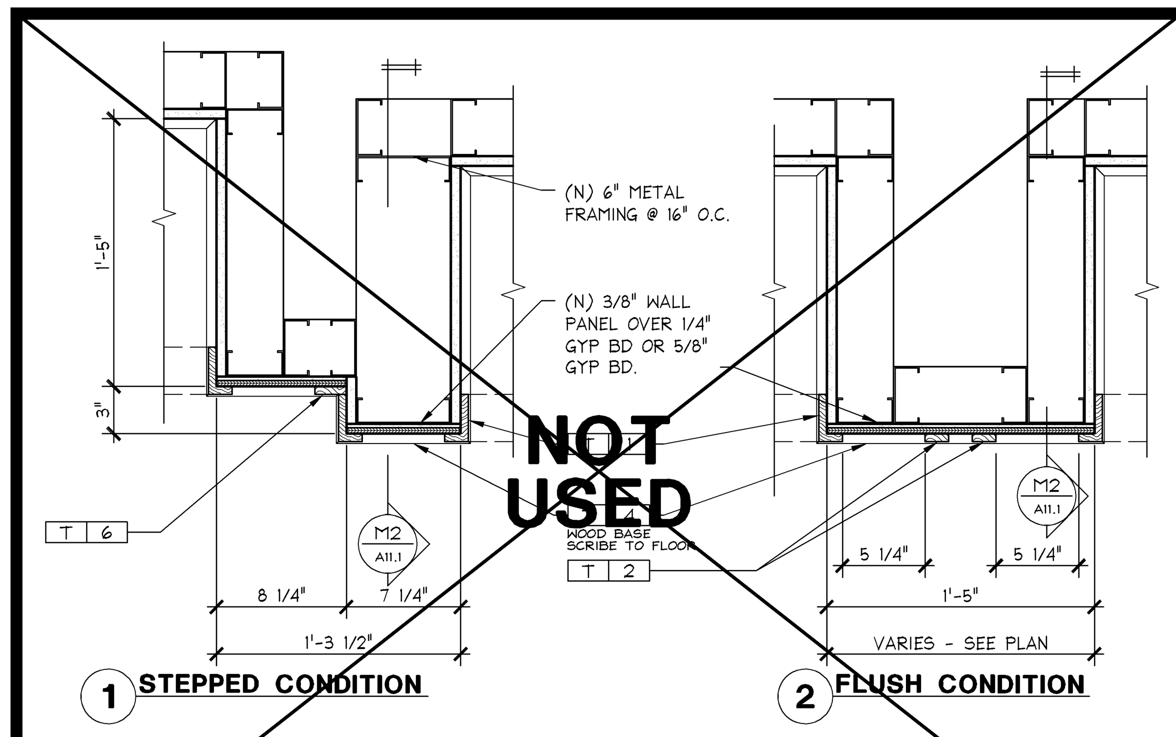

G.C. IS NOT TO INSTALL MTL. GYP. BD. CORNER BEAD OR J-MOLD BEHIND ASSEMBLED TRIM PIECES

FOR VSS WOOD TRIMS REFER TO J & K ON A11.1

FOR SPECIFIC FINISHES SEE FLOOR & WALL FINISH PLAN

REFER TO A12.2 FOR STUD GAUGE AND CONNECTION REQUIREMENTS

DOUBLE PILASTER AT TYPICAL CABINET | 1 1/2" = 1'-0" | 05D-A111-S00-DETL | S | 12.20.11

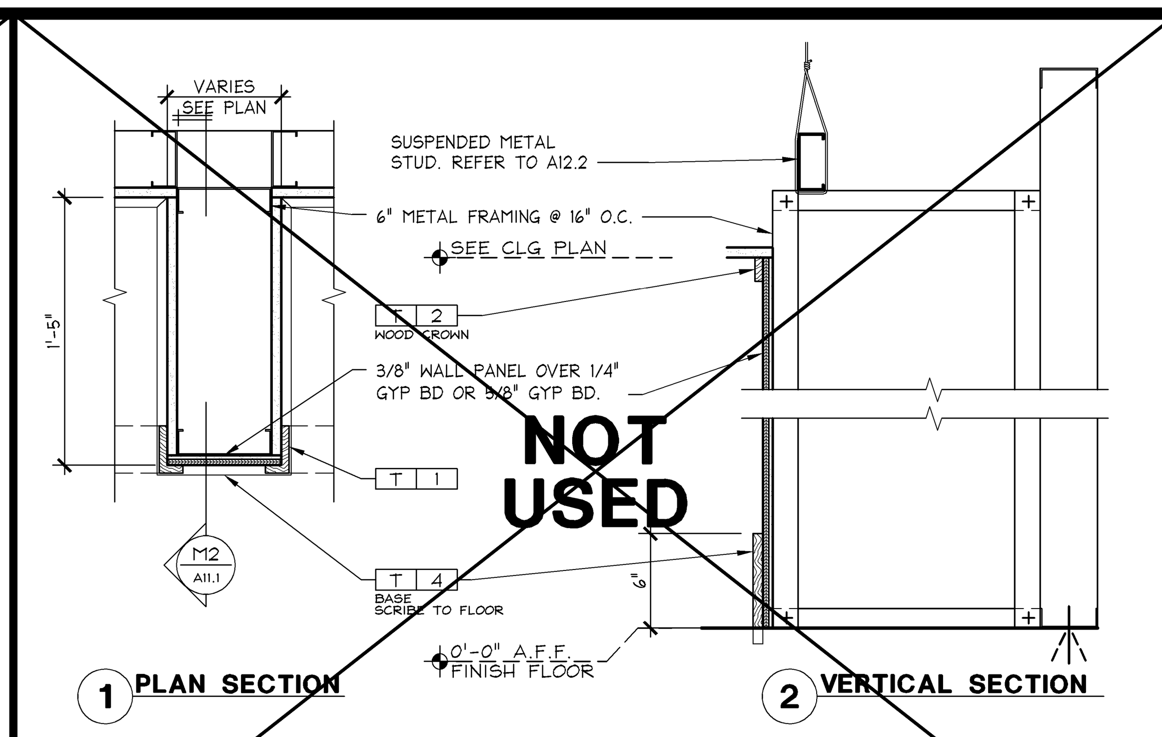

G.C. IS NOT TO INSTALL MTL. GYP. BD. CORNER BEAD OR J-MOLD BEHIND ASSEMBLED TRIM PIECES

FOR VSS WOOD TRIMS REFER TO J/K ON A11.1

FOR SPECIFIC FINISHES SEE FLOOR & WALL FINISH PLAN

REFER TO A12.2 FOR STUD GAUGE AND CONNECTION REQUIREMENTS

PILASTER AT TYPICAL CABINET | 1 1/2" = 1'-0" | M

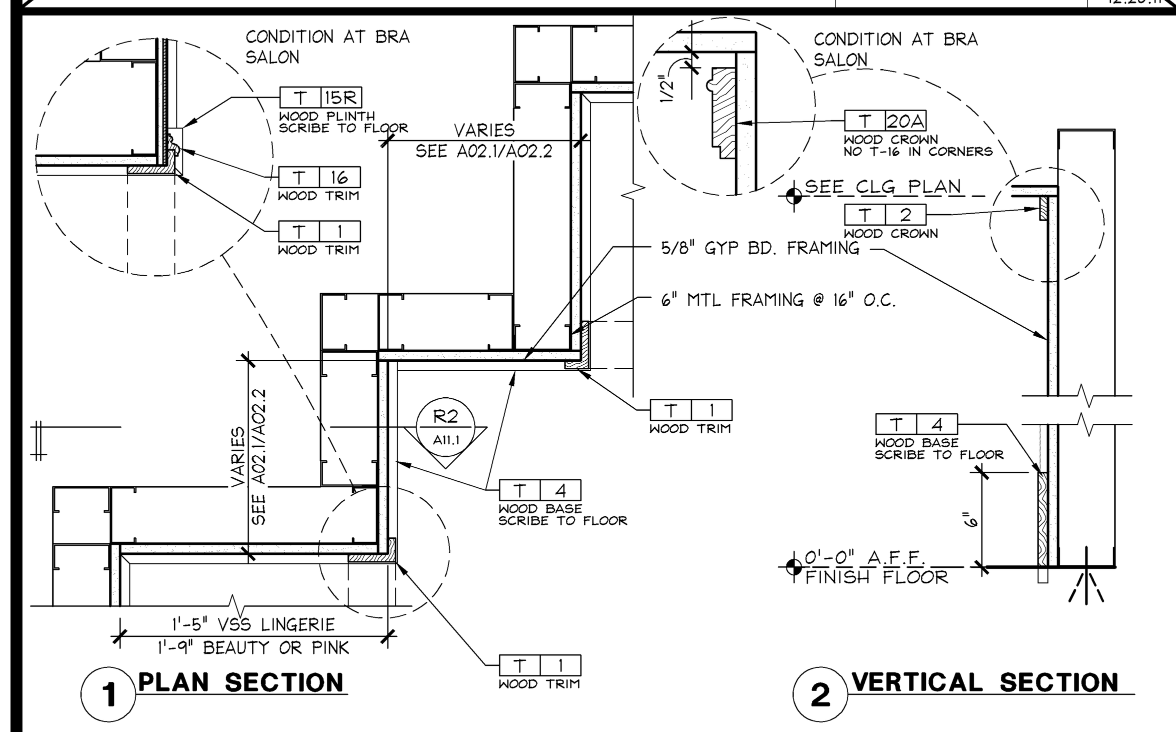

G.C. IS NOT TO INSTALL MTL. GYP. BD. CORNER BEAD OR J-MOLD BEHIND ASSEMBLED TRIM PIECES

FOR VSS WOOD TRIMS REFER TO J/K ON A11.1

FOR SPECIFIC FINISHES SEE FLOOR & WALL FINISH PLAN

REFER TO A12.2 FOR STUD GUAGE AND CONNECTION REQUIREMENTS

CORNER AT TYPICAL CABINET | 1 1/2" = 1'-0" | -- | R | 12.04.13

FOR VSS WOOD TRIMS REFER TO J & K ON A11.1

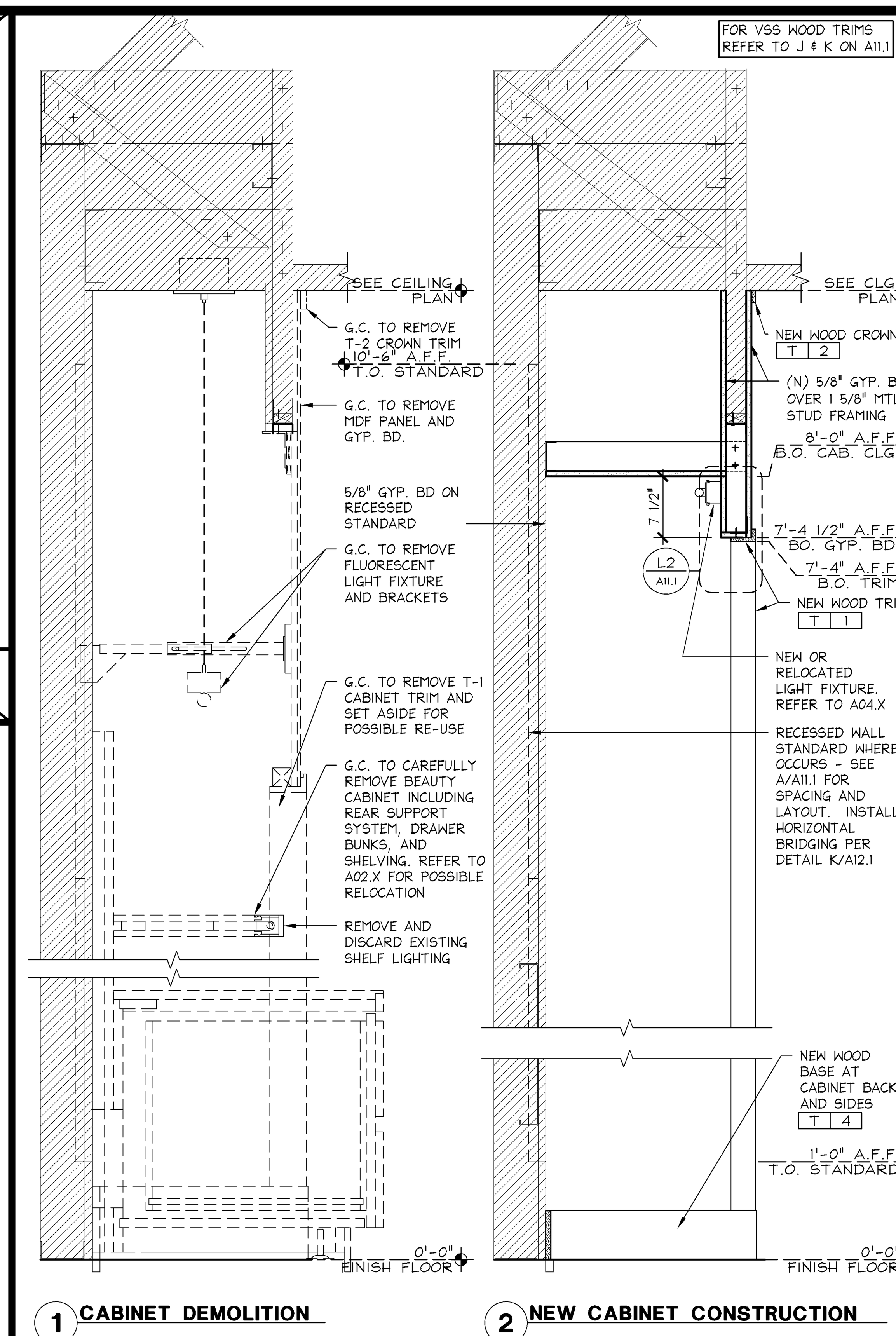

VALANCE EXTENSION @ (E) BEAUTY FORUM ADAPTIVE/POST ADAPTIVE | 1" = 1'-0" | 05D-A111A-G00-DETL | G | 07.01.13

REFER TO A12.2 FOR STUD GUAGE AND CONNECTION REQUIREMENTS

REFER TO F/A11.7 FOR RECESSED STANDARD PANEL ATTACHMENT INFORMATION

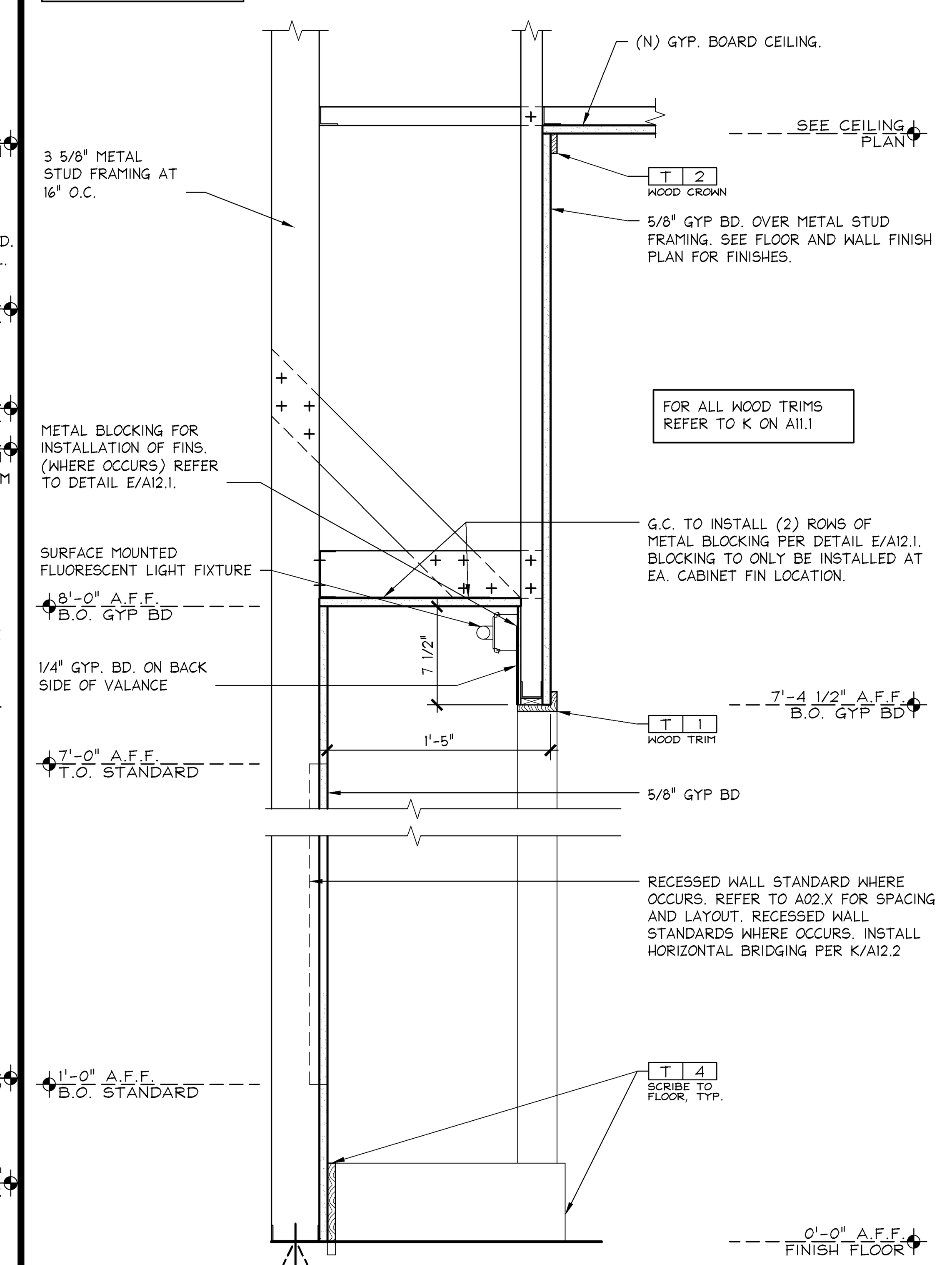

NEW VSS CABINET SECTION TO MATCH EXISTING FORUM VSS CABINET | 1 1/2" = 1'-0" | -- | C | 12.04.13

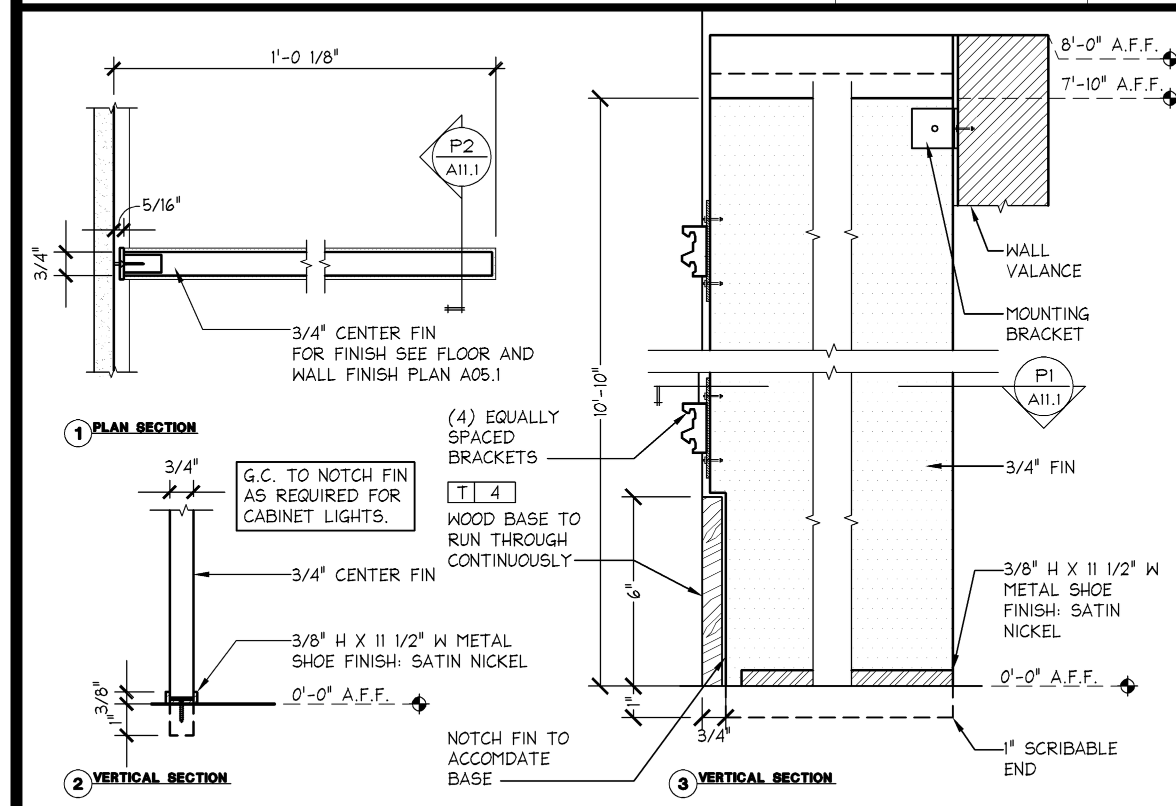

3/4" FIN INSTALLATION @ RECESSED STUD FORUM ADAPTIVE/POST ADAPTIVE | 3" = 1'-0" | 05D-A111-P01-DETL | P | 07.01.13

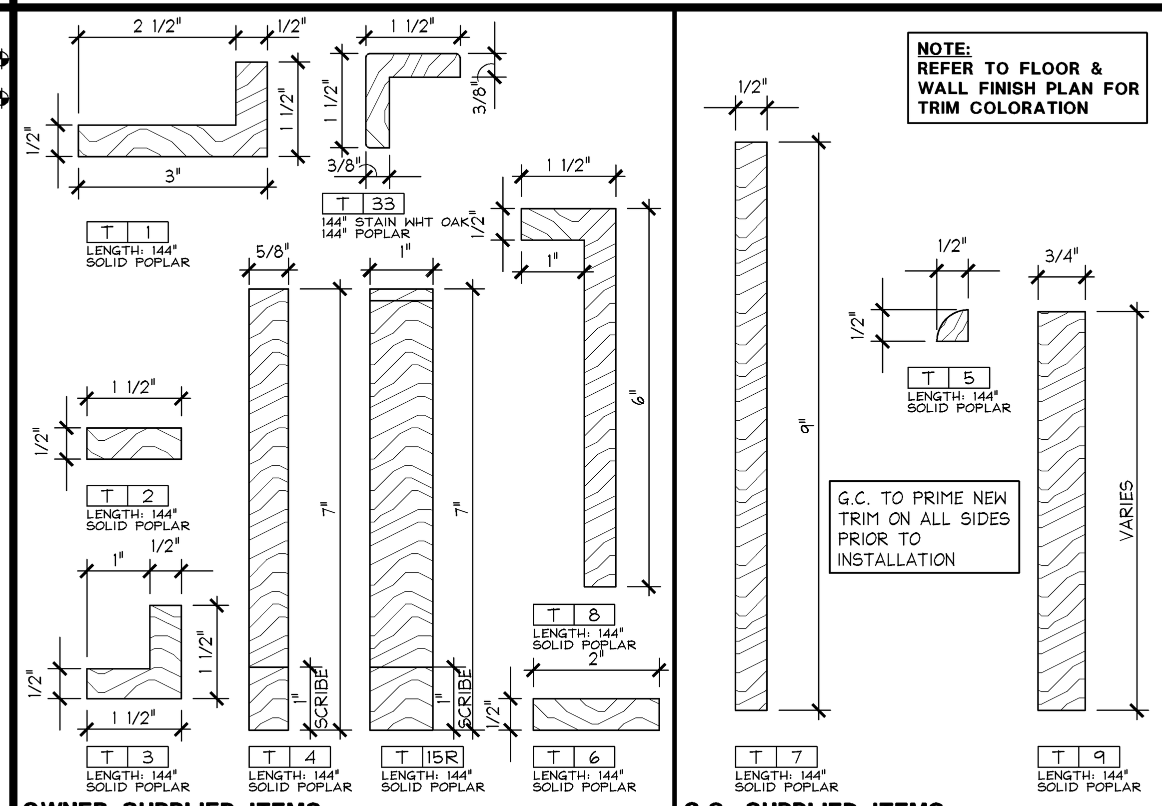

34TH STREET TRIM PROFILES | 6" = 1'-0" | 05D-A111-K00-DETL | K | 08.31.12

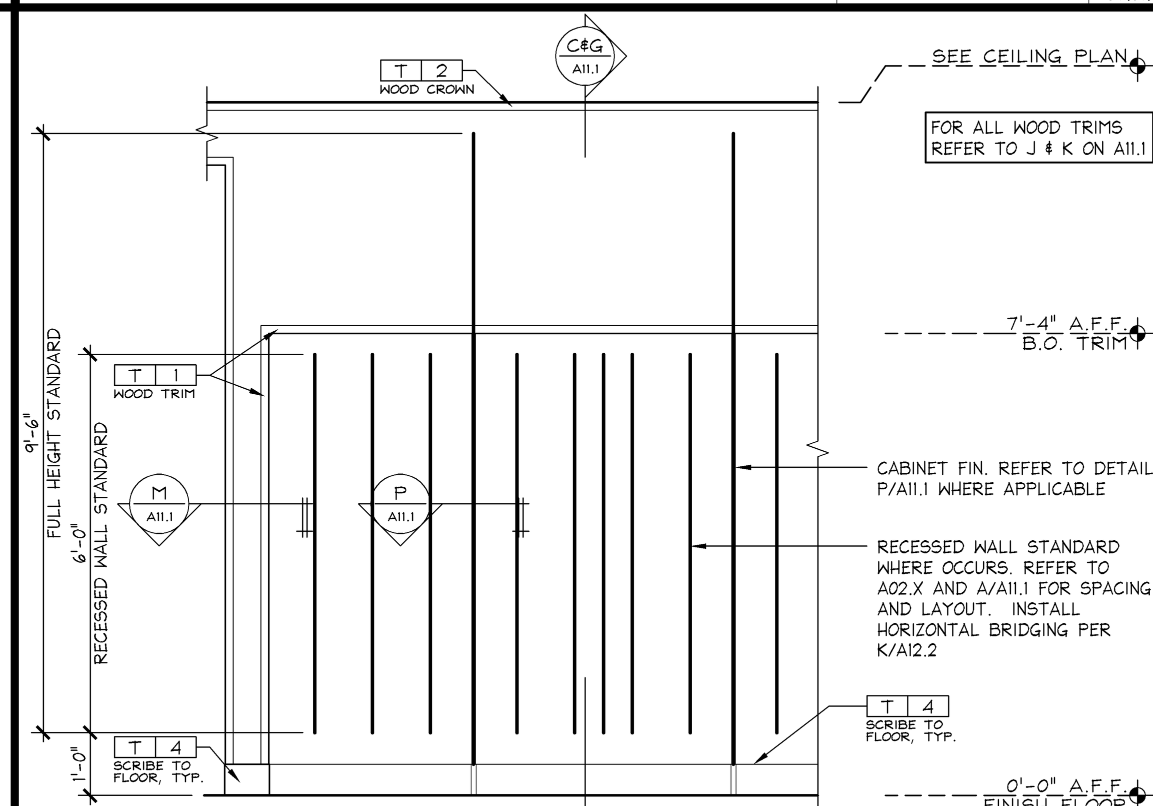

VSS CABINET ELEVATION FORUM ADAPTIVE/POST ADAPTIVE | 1/2" = 1'-0" | -- | F | 12.04.13

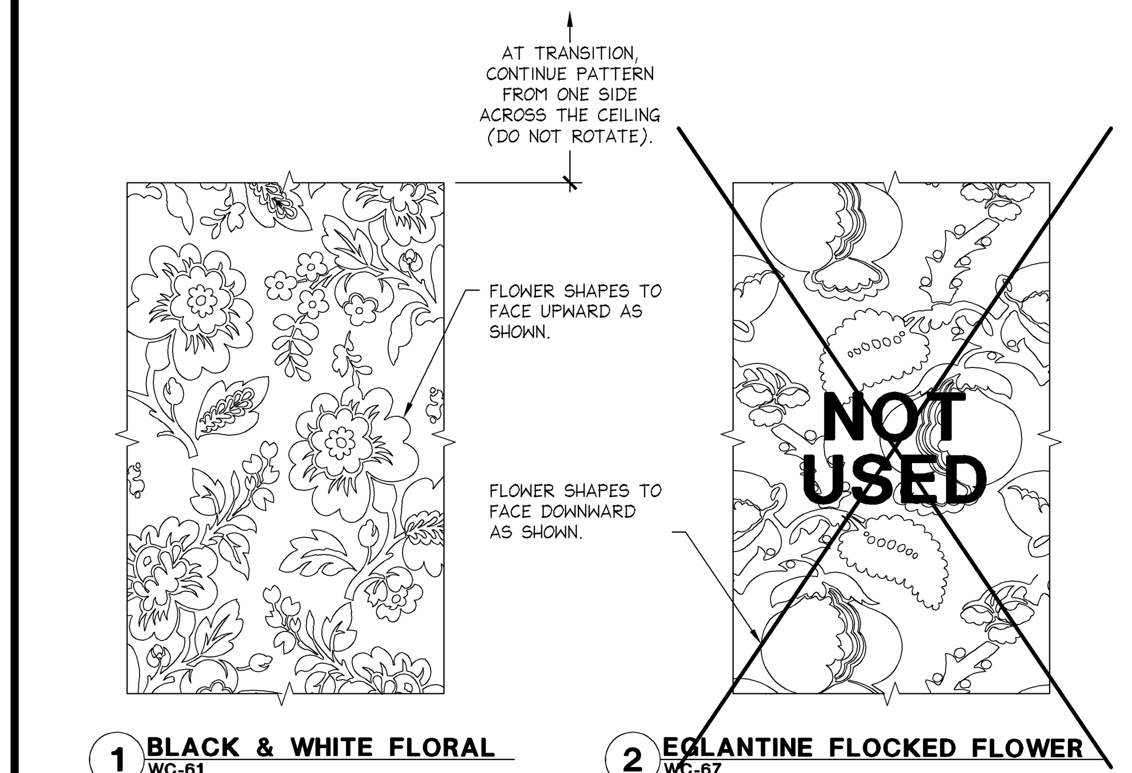

WALLCOVERING ORIENTATION DETAIL | N.T.S. | 05D-A1105-D00-DETL | B | 04.04.14

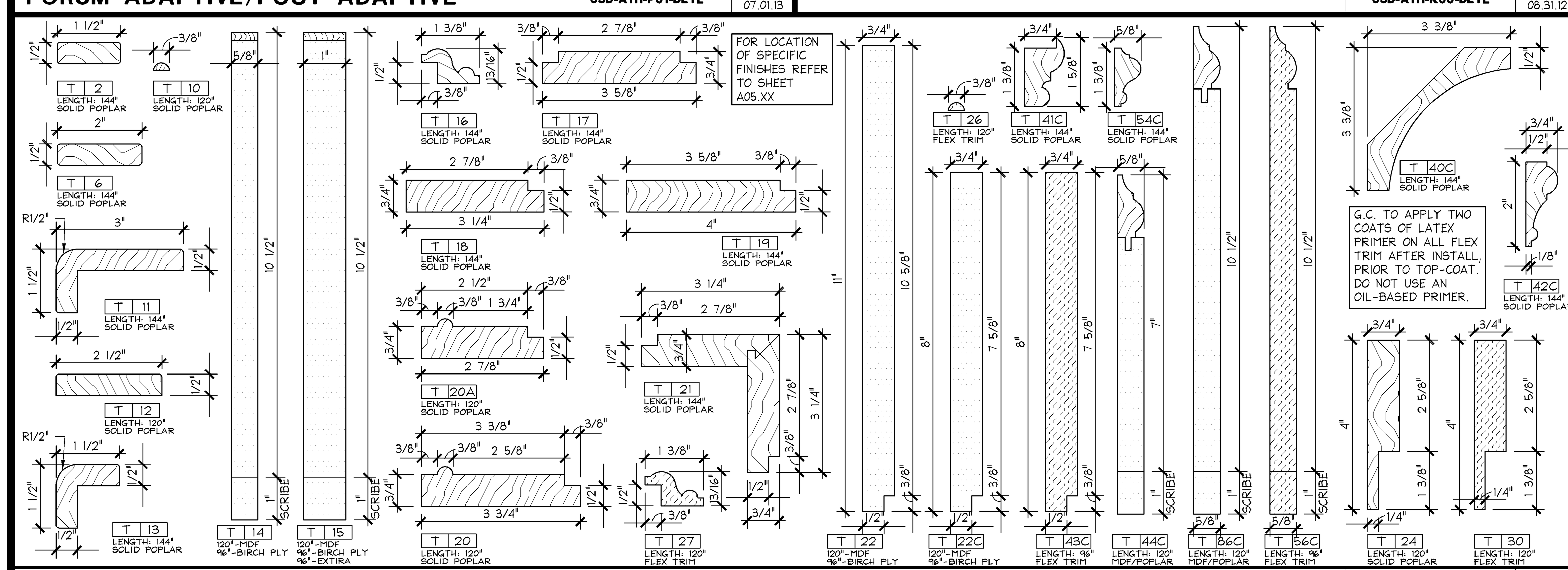

VSS TRIM PROFILES | 6" = 1'-0" | 05D-A111-J00-DETL | J | 05.06.13

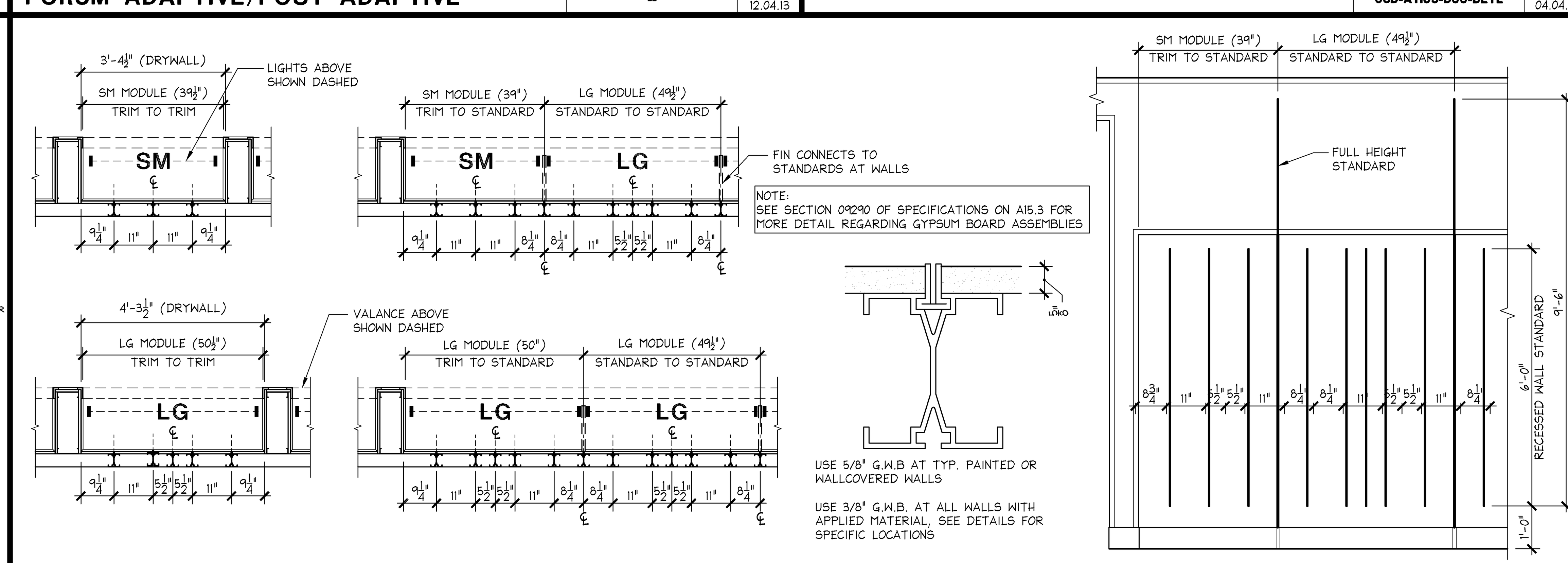

RECESSED WALL STANDARD STUD SPACING & INSTALL FORUM ADAPTIVE/POST ADAPTIVE | 1/2" = 1'-0" | -- | A | 11.18.13

Stantec
Stantec Architecture Inc.
1383 N. McDowell Blvd., Suite 250
Petaluma, CA U.S.A. 94954
Tel. 707.765.1660 Fax. 707.765.9908
www.stantec.com

Limitedbrands
LIMITED STORE PLANNING, INC.
d/b/a STORE DESIGN & CONSTRUCTION
Three Limited Parkway · Columbus, Ohio 43230
Telephone: 614.415.7000 · Fax: 614.415.7349

PROHIBITION ON REUSE:
THESE DRAWINGS AND SPECIFICATIONS WERE PREPARED FOR USE ON A SPECIFIC SITE CONTEMPORANEOUSLY WITH THEIR ISSUE DATE. THEY ARE NOT INTENDED FOR USE ON A DIFFERENT PROJECT SITE OR AT A LATER TIME. REUSE OF THESE DRAWINGS AND SPECIFICATIONS, OR ANY REPRODUCTION THEREOF, ON ANOTHER PROJECT IS PROHIBITED AND CONTRARY TO LAW UNLESS EXPRESSLY AUTHORIZED IN WRITING BY LIMITED STORE PLANNING, INC., D/B/A LIMITED STORE DESIGN AND CONSTRUCTION ("LSDC").

THESE DRAWINGS AND SPECIFICATIONS ARE THE PROPERTY OF LSDC AND SHALL NOT BE DISPLAYED IN ANY MANNER OR USED ON ANY OTHER PROJECT EXCEPT BY WRITTEN AGREEMENT WITH LSDC. NO REPRODUCTION OF THESE DRAWINGS AND SPECIFICATIONS SHALL BE MADE WITHOUT THE WRITTEN AUTHORIZATION OF THE LSDC. ALL ORIGINALS OR REPRODUCTIONS OF THESE DRAWINGS AND SPECIFICATIONS MUST BE RETURNED TO LSDC UPON COMPLETION OF THEIR INTENDED USE, UNLESS OTHERWISE AGREED BY THE LSDC.

COPYRIGHT NOTICE:
THESE DRAWINGS AND SPECIFICATIONS ARE COPYRIGHTED AND SUBJECT TO COPYRIGHT PROTECTION AS AN "ARCHITECTURAL WORK" UNDER SEC. 102 OF THE COPYRIGHT ACT, 17 U.S.C. AS AMENDED DECEMBER 1990; KNOWN AS THE ARCHITECTURAL WORKS COPYRIGHT PROTECTION ACT OF 1990. THE PROTECTION INCLUDES, WITHOUT LIMITATION, THE OVERALL FORM, ARRANGEMENT AND COMPOSITION OF SPACES, AND ELEMENTS OF THE DESIGN. UNDER SUCH PROTECTION, UNAUTHORIZED USE OF THESE DRAWINGS AND SPECIFICATIONS MAY RESULT IN CESSATION OF CONSTRUCTION, BUILDING SEIZURE, AND/OR MONETARY LIABILITY.

PROJECT INFORMATION:

010500133

VICTORIA'S SECRET

QUAIL SPRINGS MALL
SPACE NO. 119
2501 WEST MEMORIAL RD.
OKLAHOMA CITY, OK 73134

SCOPE: OPTIMIZATION
DESIGN TYPE: NMA/FORUM AA1
LSD&C PROJECT #: 00060919
PACKAGE: GENERATING 2013 (R131Sa)/142Fa
A/E PROJECT #: 2007684006

REVISIONS:

REQUIRED BY: | DATE

ELITE CONSTRUCTION GROUP
LAKE JACKSON, TX
PHONE: 979-285-0712
NOTE: THESE PRINTS HAVE BEEN REDUCED BY 50 PERCENT. SCALE WILL BE 50 PERCENT OF WHAT IS NOTED ON PLANS

DATE ISSUED: 05.09.2014
DESIGNED BY: KW
DRAWN BY: MS
CHECKED BY: DB/BV

VSS CONSTRUCTION DETAILS

DRAWING NUMBER:
A11.1